NEED HELP WITH INSTALLATION, MAINTENANCE OR SERVICE? CALL 1-800-255-3700.

freegamemanuals.com

Nintendo®

Nintendo of America Inc.
P.O. Box 957, Redmond, WA 98073-0957 U.S.A.

PRINTED IN JAPAN

NES-A-CK(USA-5)

NES CLEANING KIT

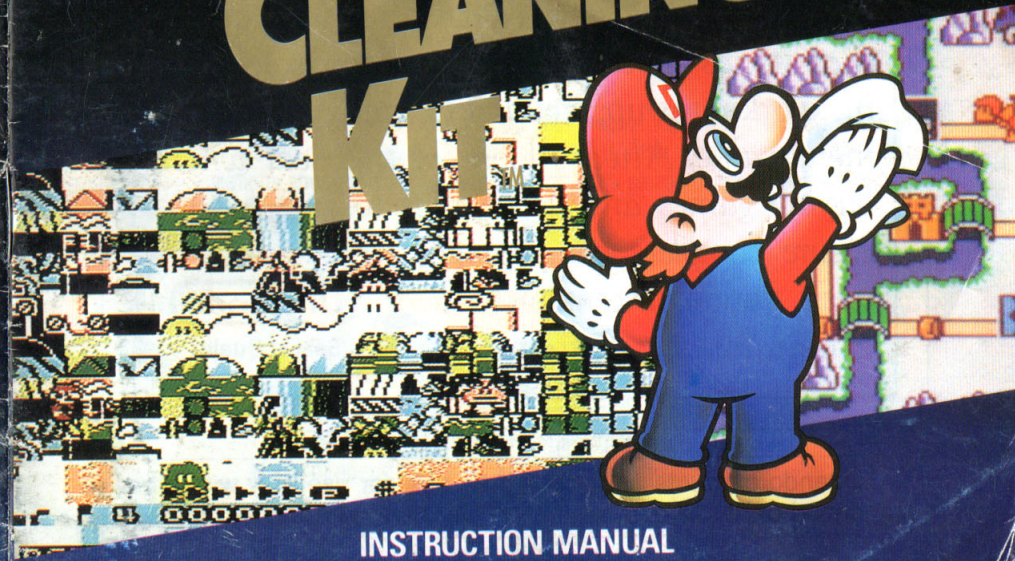

INSTRUCTION MANUAL

This official seal is your assurance that Nintendo has reviewed this product and that it has met our standards for excellence in workmanship, reliability and entertainment value. Always look for this seal when buying games and accessories to ensure complete compatibility with your Nintendo Entertainment System.

Official Nintendo Seal of Quality ®

All Nintendo products are licensed by sale for use only with other authorized products bearing the Official Nintendo Seal of Quality™.

Thank you for purchasing the NES Cleaning Kit™. By regularly using this cleaning kit, you will extend the life of your Nintendo Entertainment System® Control Deck™ and Game Paks.

IMPORTANT

Please read the instructions carefully before using your cleaner. Failure to read and follow these instructions may result in damage to your Control Deck™. If, after reading these instructions, you have any questions about use of the NES Cleaning Kit™, please call our Consumer Service Department at the number below:

NEED HELP?

Nintendo Consumer Service Hotline
1-800-255-3700
Mon.-Sat., 4:00 a.m.-12:00 Midnight
Sun., 6:00 a.m.-7:00 p.m., All times are Pacific time.
Hours of operation are subject to change without notice.

™ and ® are trademarks of Nintendo of America Inc. © 1989 Nintendo

A. CLEANING GAME PAKS

- Game Paks should be cleaned at least once a month or whenever they become dirty.

1. Remove the cleaning wand from the plastic bag.
2. With your finger, apply a small amount of water* to the blue end of the cleaner until it is slightly damp.
   * If possible, distilled water should be used. *OR*
   For maximum cleaning effect, use a mixture of 1 teaspoon isopropyl alcohol and 1 teaspoon water.
3. Rub *both sides* of the Game Pak edge connector by pressing against it gently with the blue end of the cleaner. Move the cleaner side to side to clean all of the edge connector pins. (See Drawing A.)
4. With the white end of the cleaner, gently dry both sides of the Game Pak edge connector.
5. Check the connector pins on both sides of the Game Pak. They should be clean, free of lint and have a shiny gold finish. If not, repeat steps 3 and 4.

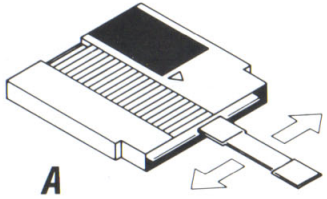

B. CLEANING THE CONTROL DECK

- The Control Deck should be cleaned at least once a month or whenever dirty. Clean the Control Deck at the same time you clean your Game Paks for best results.

WARNING — NEVER CLEAN YOUR CONTROL DECK WHILE IT IS PLUGGED IN!

1. Unplug the power cord from the Control Deck at either the wall outlet (transformer) or the back of the Control Deck.
2. Open the NES cleaning cartridge by gently pressing on the tab on the side and lifting off the lid. Remove the flat Control Deck cleaning card. (See Drawing B.)

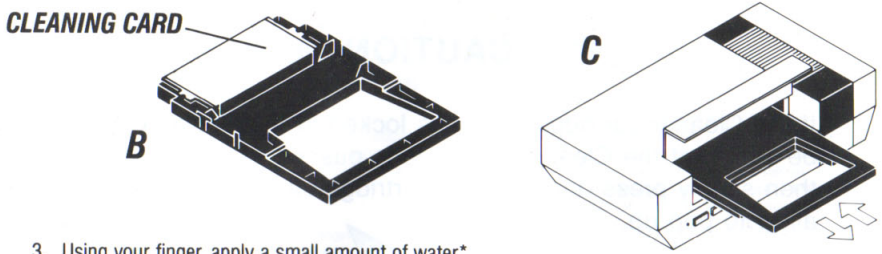

3. Using your finger, apply a small amount of water* to both sides of one of the long edges of the card until it is slightly damp.
   * If possible, distilled water should be used. *OR*
   For maximum cleaning effect, use a mixture of 1 teaspoon isopropyl alcohol and 1 teaspoon water.
4. Reassemble the cleaning cartridge with the damp edge of the card facing out. Insert the cleaner into the Control Deck as you would a Game Pak. Push the cleaner into the down position and move the cleaner in and out 5-10 times. (During the cleaning process, the cleaner will move forward and backward about ¾".) (See Drawing C.)
5. Remove the cleaning cartridge and allow the Control Deck to dry for at least *1 hour* before plugging it back in and turning it on.

Additional Hints

- After cleaning your Game Paks and Control Deck many times, the cleaning surfaces may become dirty. Replace the dirty parts with the replacement parts provided or wash them with liquid dish soap. Rinse the parts very thoroughly and allow to dry.
- Additional Cleaning Kit parts can be ordered from Nintendo by using the following order form or by calling Nintendo Consumer Service at 1-800-255-3700.
- The cleaning wand and two extra cleaning tips can be stored in the extra compartments found inside the cleaning cartridge.

CAUTION

If the Cleaner cartridge becomes locked in the Down position, be sure that the Cleaner cartridge is pushed in all the way and then simply press down on the cartridge carrier as shown, and allow to pop up.

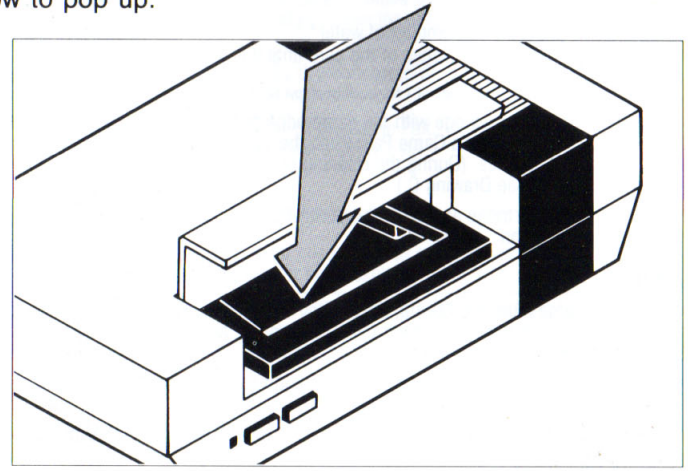

WARRANTY AND SERVICE INFORMATION

90-DAY LIMITED WARRANTY

HARDWARE*, ACCESSORIES, GAME PAKS ("PRODUCT")
*HARDWARE ONLY: TO EXPEDITE AUTHORIZATION OF ANY REQUIRED WARRANTY WORK, WE RECOMMEND THAT YOU COMPLETE AND RETURN YOUR WARRANTY CARD WITHIN 10 DAYS OF PURCHASE (OR RECEIPT AS A GIFT).

90-DAY LIMITED WARRANTY

Nintendo of America Inc. ("Nintendo") warrants to the original purchaser that this product shall be free from defects in material and workmanship for a period of 90 days from the date of purchase. If a defect covered by this warranty occurs during this 90-day warranty period, Nintendo will repair or replace the defective product or component part, at its option, free of charge.

WARRANTY SERVICE OR REPAIR/SERVICE AFTER EXPIRATION OF WARRANTY

To receive this warranty service or to receive service after warranty expiration:

1. **DO NOT** return your product to the retailer.
2. Please call the **NINTENDO WORLD CLASS SERVICE®** Center Consumer Assistance Hotline at: **1-800-255-3700**. Our hours of operation are from 4:00 am to Midnight, Pacific Time, Monday through Saturday, and from 6:00 am to 7:00 pm, Pacific Time on Sundays (times subject to change). If the Nintendo Service Representative is unable to solve the problem over the telephone, you will be referred to the nearest **AUTHORIZED NINTENDO WORLD CLASS SERVICE®** Center for prompt, professional warranty service or repair and replacement components. You may also refer to your yellow pages directory under the heading of *Video Games - Service & Repair*, for the nearest location.

To satisfy the needs of our customers, Nintendo maintains a professional network of **AUTHORIZED NINTENDO WORLD CLASS SERVICE®** Centers located in major metropolitan areas and also offers express factory service. In some instances it may be necessary to ship the complete product, FREIGHT PREPAID AND INSURED FOR LOSS OR DAMAGE to the nearest service location.

This warranty shall not apply if the product has been damaged by negligence, accident, unreasonable use, commercial use, modification, tampering, or by other causes unrelated to defective materials or workmanship. This warranty shall not apply if any product serial number has been altered, defaced, or removed.

WARRANTY LIMITATIONS

ANY APPLICABLE IMPLIED WARRANTIES, INCLUDING WARRANTIES OF MERCHANTABILITY AND FITNESS FOR A PARTICULAR PURPOSE, ARE HEREBY LIMITED TO NINETY DAYS FROM THE DATE OF PURCHASE AND ARE SUBJECT TO THE CONDITIONS SET FORTH HEREIN. IN NO EVENT SHALL NINTENDO BE LIABLE FOR CONSEQUENTIAL OR INCIDENTAL DAMAGES RESULTING FROM THE BREACH OF ANY EXPRESS OR IMPLIED WARRANTIES.

The provisions of this warranty are valid in the United States and Canada only. Some states/provinces do not allow limitations on how long an implied warranty lasts or exclusion of consequential or incidental damages, so the above limitations and exclusions may not apply to you. This warranty gives you specific legal rights, and you may also have other rights which vary between states/provinces.

NES CLEANING KIT CONSUMER PARTS LIST & ORDER FORM

Nintendo Part No.	Part Name	Price	Qty.	Amount of Purchase
18528	REPLACEMENT CLEANING KIT PARTS (Includes 2 cleaning cards and 4 cleaning tips)	$8.00		
			SUBTOTAL	
			WASHINGTON STATE RESIDENTS ADD 8.1% SALES TAX	
			POSTAGE & HANDLING ($2 for order of $4 or more, $0.50 for orders of less than $4)	
99004	• FOR EXPEDITED SHIPPING SERVICE (2 DAY AIR FREIGHT) PLEASE ADD AN ADDITIONAL $2.50.		TOTAL AMOUNT DUE	

To Order by Phone (Requires VISA or MASTERCARD) Call: 1-800-255-3700, 4:00 A.M. to 12:00 Midnight Monday through Saturday and 6:00 A.M. to 7:00 P.M. on Sunday. (All times are Pacific time. Hours of operation are subject to change without notice.) Please have your VISA or MASTERCARD card number and expiration date ready.

To Order by Mail, Please Complete the Following:

1. Name _____ Phone ( ) _____
   Street Address _____
   City _____ State _____ Zip _____
2. Enclose Money Order of Credit Card Authorization for Total Amount Due.
   If paying by VISA or MASTERCARD:
   Please charge total amount due of $ _____ to my: ☐ VISA ☐ MASTERCARD
   CARD # _____ Expiration Date _____
   Name on Card (Print) _____
   Signed _____
3. Mail to: **Nintendo of America Inc., P.O. Box 97032, Redmond, WA 98073-9732**

Allow 6-8 weeks for delivery. We cannot accept cash or C.O.D. orders. Prices are applicable within the United States only and are subject to change without notice.